Pomoli su bussole

Knobs with bushings

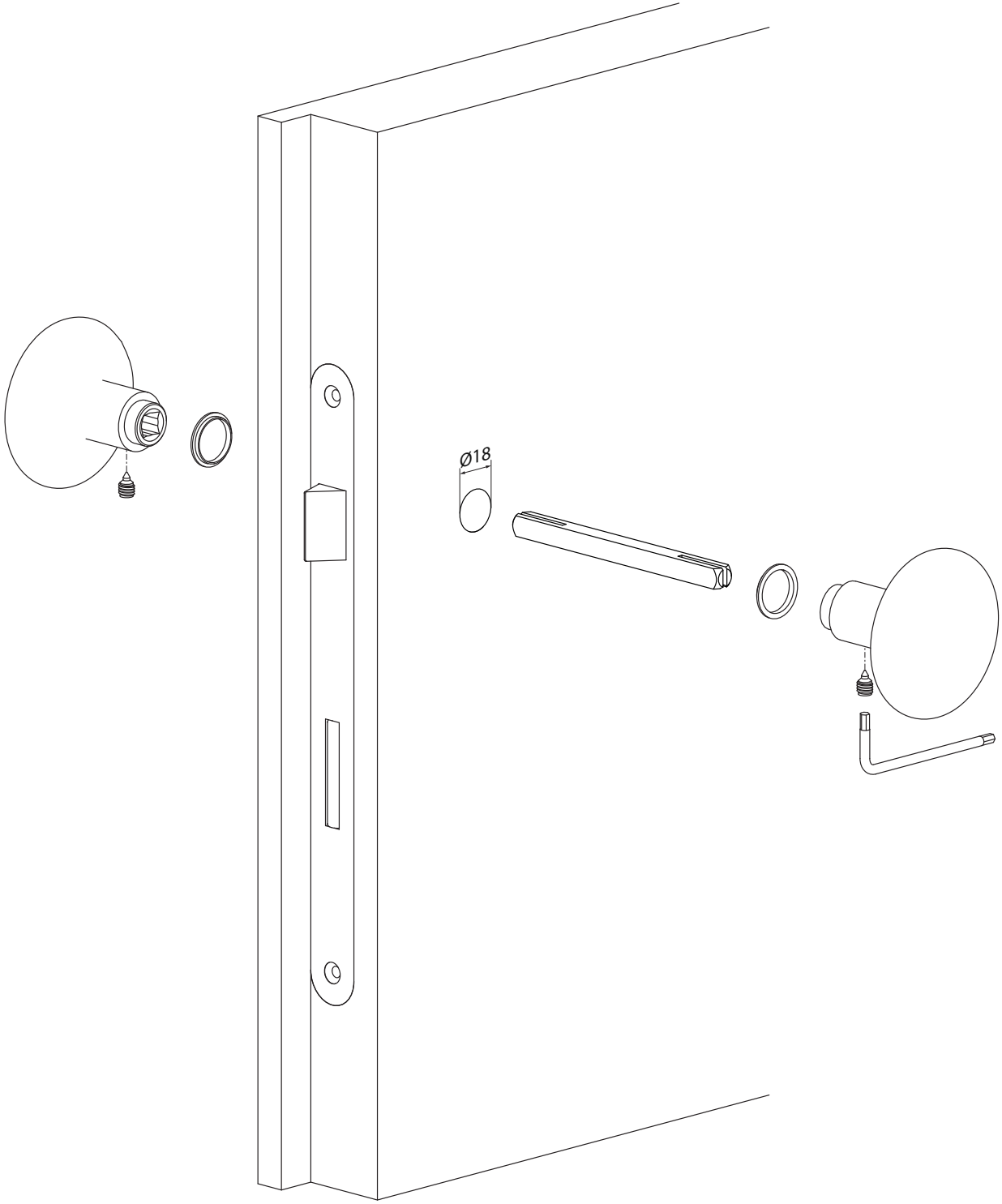

Contatti/Contacts

Olivari B. spa
e. info@olivari.it
t. +39 0322 835080

OLIVARI